Hygienisk temperaturgivare för kalibrering på plats

Användningsområde

Motståndsgivare för applikationer med hygieniska krav och som kräver på-plats-kalibrering utan att störa processen.

Armatur

Material i syrafast stål 1.4404 / AISI 316L, Ø 8/10 mm.
Ytfinhet: Ra ≤0.8 µm som standard för medieberörda delar.

Mätinsats

Mätinsatsen är konstruerad för att en Ø 2 - Ø 3 mm kalibreringsgivare skall kunna föras ner i givaren och placeras vägg i vägg med givarens mätelement. För att skydda elementet finns det ett guidnings rör ner till botten av givaren (se bilden till höger). Mätelement är monterat utanpå röret och går ej att byta ut.

Processtemperatur

TRA-H30 -30...+150 °C

Kapslingsklass

Se avsnitt Kopplingshuvuden på sida 120.

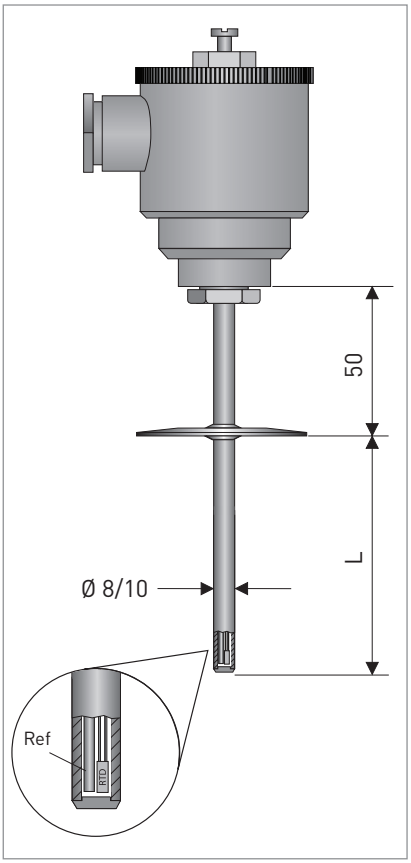

Dimensioner i mm

Tri-Clamp	ISO 2852	DIN 32676
1 1/2"	25/28	DN25/40
2"	40/51	DN50

Beställningskod för TRA-H30 med standardinställningar

V	T	H	1	0	3	0	2	3	2	1	A	0	2	2	0	1	0	0	0	0	0	0	0	0	1	0	0
								4	5		7	8	9	10													

Detta är ett urval av de valmöjligheter som finns för denna givare. För komplett beställningskod se sidan 55.

4. MÄTINSATS

2	1x Pt100	3-tråd
3	1x Pt100	4-tråd

5. TOLERANSKLASS

2	Klass A	TF
4	Klass A	WW
6	Klass B	WW
5	Klass AA	WW
7	1 / 10 DIN	WW

7. DIAMETER SKYDDSFICKA (Ø)

1	10 mm
7	8 mm

8. PROCESSANSLUTNING

0	Utan
1	Clamp DN25/28 ISO 2852
2	Clamp DN51 150 2852
A	Varivent typ N DN50/PN40

9. YTFINHET

0	Ej specificerat
1	Ra < 0.5 µm
8	Ra < 0.8 µm

10. INSTICKSLÄNGD

1	50 mm
2	100 mm
3	150 mm
4	200 mm
5	250 mm
Z	Kundanpassad längd

** 2 Ra < 0,5mm Elektropolerad*

KOMPLETT BESTÄLLNINGSNYCKEL

VTH1 4 1. Type

Non replaceable insert

1	TRA-H 10 (MEJ)	<200°C		(10)
3	TRA-H 30	<200°C	insitu callibration	(30)
A	TRA-H 11	<200°C	G1/2 Hygienic short extention nipple	(11)
K	TRA-H 12	<200°C	G1/2 Hygienic process connection	(12)

Replaceable insert

2	TRA-H 20 (MES)	<600°C		(20)
B	TRA-H 21	<600°C	G1/2 Hygienic short extention nipple	(21)
L	TRA-H 22	<600°C	G1/2 Hygienic process connection	(22)

2. Certificate

0	without	
A	Simple Apparatus declaration according to EN/IEC 60079-0 och EN/IEC60079-11	(10-22)

3. Connection heads

1	BA	cover screwed	Alu, M20x 1,5, IP 65
2	BUZ-S	hinged cover, snap-lock	Alu, M20x 1,5, IP 65
3	BUZ-T	hinged cover, screwed	Alu, M20x 1,5, IP 65
5	BUZ-H	Hinged cover screwed, High lid	Alu, M20x 1,5, IP 65
6	BUZ-HW	Hinged cover screwed, High lid with indicator,	Alu, M20x 1,5, IP 65
8	BVA	screw cover	SS, M20x 1,5, IP 65
M	BHY	screw cover	SS, M16x 1,5, IP67

4. Measuring insert = sensor / wiring

2	1x Pt100 3-wire		4	2x Pt100 3-wire	(Cl.A, WW)
3	1x Pt100 4-wire		5	2x Pt100 4-wire	(Cl.A, WW)

5. Measuring insert / tolerance class

2	Cl. A	TF	(tolerance class -30 ... +300°C)
4	Cl. A	WW	(tolerance class -100 ... +450°C)
6	Cl. B	WW	(tolerance class -200…+600°C
5	Cl. AA	WW	(tolerance class -50 ... +250°C)
7	1/10 DIN	WW	(tolerance class at 0°C)

7. Thermowell diameter

1*	10 mm	(all)
2	6 mm	(10-22)
8	8 mm	(30)

8. Process connection

0	without		**Flange**			**Thereaded**	
		1	Clamp DN25/38 ISO 2852	(10, 20, 30)	G	G 1/2 Hygienic	(11, 12, 21, 22)
		2	Clamp DN51 ISO 2852	(10, 20, 30)			
		A	Varivent type N DN50/PN40	(10, 20, 30)			

9. Surface finish wetted parts

0	without	1	Ra < 0,5 µm, polished
		2	Ra < 0,5 µm, polished and electropolished
		8	Ra < 0,8 µm, polished

10. Immersion length

1	50 mm	3	150 mm	5	250 mm
2	100 mm	4	200 mm	Z	Customized length

11. Extension tube length

0	Whitout	(11-21)
1	50 mm	(10,12,20,22,30)
2	100 mm	(10,12,20,22,30)
Z	Customized length	

12. Type of connection / head mounted transmitter

0	with flying leads for transmittter mounting			
1	Standard version with ceramic terminal block			
L	with head mounted transmitter TT 12 C	// APAQ C130	Basic RTD	
4	with head mounted transmitter TT 22 C	// IPAQ C202	Basic, RTD	[Ex]
C	with head mounted transmitter TT 33 C	// IPAQ C330	Universal	[Ex]
E	with head mounted transmitter TT 51 C	// IPAQ C520	Smart, HART, SIL2	[Ex]
M	with head mounted transmitter TT 53 C	// IPAQ C530	Smart, HART	[Ex]

13. Type of connection / rail mounted transmitter

0	without			
L	with rail mounted transmitter TT 12 R	// APAQ R130	Basic, RTD	
A	with rail mounted transmitter TT 32 R	// IPAQ-4L	Universal, 90 - 250 VAC	
B	with rail mounted transmitter TT 32 R	// IPAQ-4L	Universal, 20 - 30 VDC	
C	with rail mounted transmitter TT 33 R	// IPAQ R330	Universaldigital, sta	[Ex]
H	with rail mounted transmitter TT 51 R	// IPAQ R520	Smart, HART, SIL2	[Ex]
M	with rail mounted transmitter TT 53 R	// IPAQ R530	Smart, HART	[Ex]

14. Measuring range

0	without		1	Configuration

15. Calibration report

0*	without			
	Sensor calibration			**(single- or double-sensor)**
1	1-point	(single)	room temper	(single-sensor)
P	2-point	(single)	0°, 100°C	(double-sensor)
R	2-point	(double)	0°, 100°C	(single-sensor)
2	2-point	(single)	0%, 100% of	(double-sensor)
3	2-point	(double)	0%, 100% of	(single-sensor)
S	3-point	(single)	0°, 50°, 100°	(double-sensor)
T	3-point	(double)	0°, 50°, 100°	(single-sensor & transmitter)
4	3-point	(single)	0%, 50%, 10	(single-sensor & transmitter)
5	3-point	(double)	0%, 50%, 10	(single-sensor & transmitter)
6	customised (single)			(single-sensor & transmitter, incl. adjust.)
7	customised (double)			(single-sensor & transmitter, incl. adjust.)
	Sensor + Transmitter calibration			**(single-sensor & transmitter, incl. adjust.)**
A	2-point	(single)	0%, 100% of	(single-sensor & transmitter, incl. adjust.)
B	3-point	(single)	0%, 50%, 10	(single-sensor)
C	5-point	(single)	0%, 25%, …	(double-sensor)
	Sensor + Transmitter calibration w			**(single-sensor)**
E	2-point	(single)	0%, 100% of	(double-sensor)
F	3-point	(single)	0%, 50%, 100% of range	
G	5-point	(single)	0%, 25%, …, 100% of range	
H	customised			

Vissa kombinationer är inte möjliga. Vänligen kontakta KROHNE Inor för ytterligare information.

VTH1	4						1																			
VTH1	4						1														1					

16. Test certificate

0	without
1	Declaration of compliance with order 2.1 according to EN 10204
A	Surface finish test report 2.1 according to EN 10204
B	Declaration of compliance and surface finsh test reprt

17. Pressure test on wetted parts

0	without
1	pressure test with inspection certificare 3.1 EN 10204
2	pressure test with test report 2.2 EN 10204

18. Material certification on wetted parts

0	without
1	Material certificate 3.1 according to EN 10204

19. Marking

0	without	
1	Stainless steel tag plate	(40 x 20 mm)
2	Stainless steel tag plate	(120 x 46 mm)

20. Operating instructions

0	without
1	German
3	English
4	French
8	Swedish
G	English/Germany

22. Version

0	without
1	SIL2, EU- Manufacturer's declaration (TT51)

23. Accessories 1

0	without	
G	Weld-in HWN 200	KPW3-321
H	Weld-in , collar HWN 210	KPW3-322
K	Weld-in, shoulder, HWN 220	KPW2-326
L	Weld-in, speherical, HWN 250	KPW2-324
N	Threaded G1 M, HGA 200	KPH1-32CB
R	DIN 11851, DN25, HMT 225	KPH3-3221
S	DIN 11851, DN40, HMT 240	KPH3-3224
T	DIN 11851, DN50, HMT 250	KPH3-3225
W	SMS 1145 / 51	KPH1-3236

24. Accessories 2

0	without	
H	Hygienic blind plug	KPX5-32
W	Welding dummy (mandrels	KPX6-36

25. Electrical connection

0	without
2	M12x1 4-pole
C	Cable Gland IP68 6...12mm
H	Hyg. Cable Gland IP68 9…12 mm

Order code

Exempel konfigurering
VTH14K082212G822L0100000010G02

Givare för Hygien applikation

Pt100 klass A 3-tråds tunnfilm element
Ø6 x 100 mm skyddsrör i 1.4404 RA < 0,8µm
Rostfritt kopplingshuvud med M12 kontakt för anslutning
APAQ C130 Transmitter monterat i ett rostfritt kopplings huvud

Levereras med hygienisk swetsadapter

Vissa kombinationer är inte möjliga. Vänligen kontakta KROHNE Inor för ytterligare information.